# WPW 型

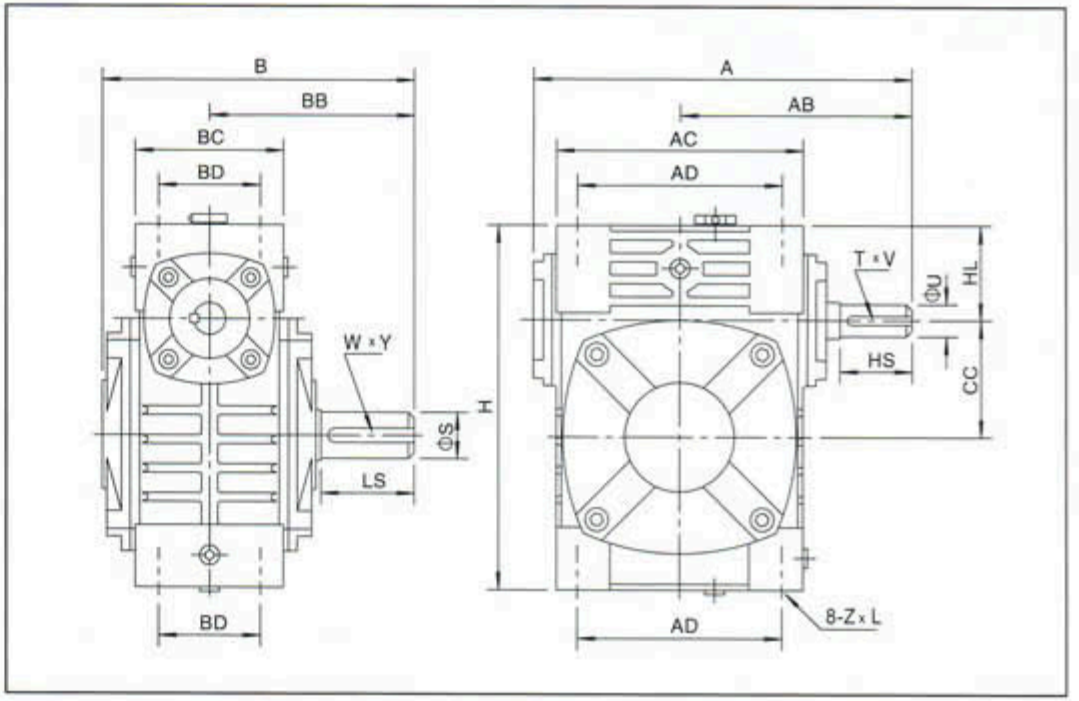


## 轴指向表示 SHAFT DIRECTION

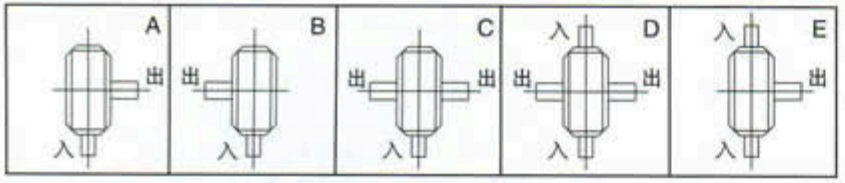


| 型号 size | 传动比 ratio | A | AB | B | BB | AC | BC | AD | BD | CC | HL | H | Z×L | 输入轴 input shaft | | | 输出轴 output shaft | | | 重量 weight(kg) |
|---|---|---|---|---|---|---|---|---|---|---|---|---|---|---|---|---|---|---|---|---|
| | | | | | | | | | | | | | | HS | U | T×V | LS | S | W×Y | |
| 40 | | 149 | 89 | 124 | 79 | 95 | 61 | 78 | 42 | 40 | 35 | 125 | M6×12 | 25 | 12 | 4×2.5 | 28 | 14 | 5×3 | 4 |
| 50 | | 175 | 107 | 150 | 97 | 111 | 68 | 85 | 50 | 50 | 35 | 150 | M6×18 | 30 | 12 | 4×2.5 | 40 | 17 | 5×3 | 6.5 |
| 60 | 10 | 198 | 122 | 168 | 112 | 127 | 76 | 105 | 55 | 60 | 42 | 177 | M8×20 | 40 | 15 | 5×3 | 50 | 22 | 6×3.5 | 9 |
| 70 | 15 | 231 | 140 | 194 | 131 | 152 | 86 | 125 | 65 | 70 | 55 | 215 | M10×25 | 40 | 18 | 6×3.5 | 60 | 28 | 8×4 | 13 |
| 80 | 20 | 261 | 160 | 214 | 142 | 169 | 102 | 140 | 70 | 80 | 65 | 250 | M12×28 | 50 | 22 | 6×3.5 | 65 | 32 | 10×5 | 21 |
| 100 | 25 | 322 | 190 | 254 | 169 | 216 | 117 | 180 | 90 | 100 | 80 | 310 | M12×30 | 50 | 25 | 8×4 | 75 | 38 | 10×5 | 34 |
| 120 | 30 | 381 | 229 | 282 | 190 | 256 | 124 | 220 | 100 | 120 | 95 | 370 | M14×32 | 65 | 30 | 8×4 | 85 | 45 | 14×5.5 | 51 |
| 135 | 40 | 433 | 260 | 317 | 210 | 296 | 147 | 260 | 110 | 135 | 105 | 425 | M16×35 | 75 | 35 | 10×5 | 95 | 55 | 16×6 | 78 |
| 155 | 50 | 504 | 302 | 382 | 252 | 345 | 185 | 280 | 120 | 155 | 103 | 461 | M16×35 | 85 | 40 | 12×5 | 110 | 60 | 18×7 | 102 |
| 175 | 60 | 545 | 325 | 402 | 262 | 374 | 192 | 320 | 140 | 175 | 123 | 521 | M16×35 | 85 | 45 | 14×5.5 | 110 | 65 | 18×7 | 142 |
| 200 | | 587 | 350 | 467 | 305 | 412 | 230 | 360 | 150 | 200 | 130 | 575 | M20×36 | 95 | 50 | 14×5.5 | 125 | 70 | 20×7.5 | 202 |
| 250 | | 705 | 420 | 552 | 360 | 500 | 285 | 420 | 190 | 250 | 150 | 700 | M24×42 | 110 | 60 | 18×7 | 155 | 90 | 25×9 | 340 |

# 1. 产品结构

## 1. Product structure

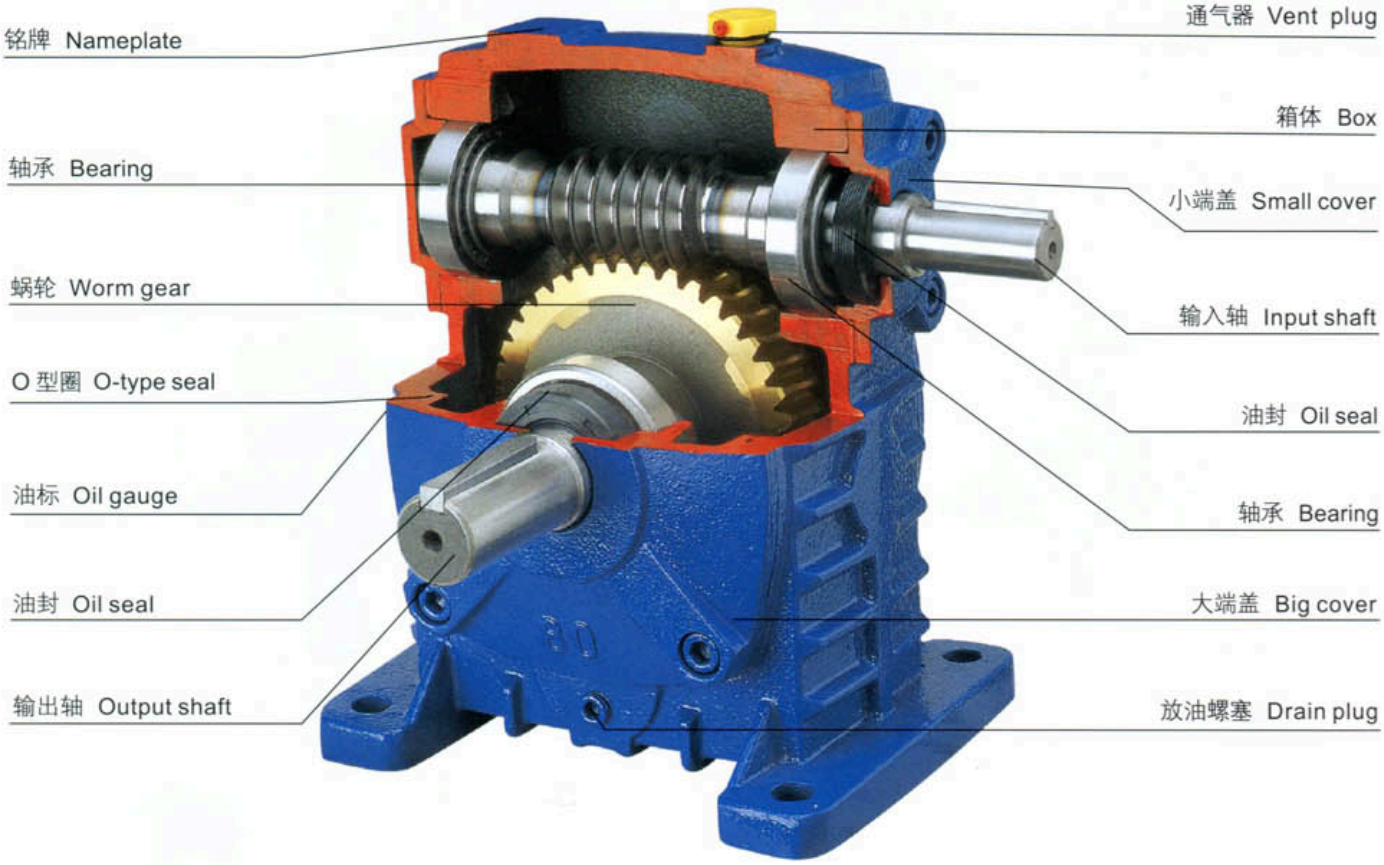


# 2. 型号说明

## 2. Model Instructions

| W | P | W | E | D | K | A | 50-80 | — | 600 | — | B |
|---|---|---|---|---|---|---|---|---|---|---|---|
| 1 | 2 | 3 | 4 | 5 | 6 | 7 | 8 | | 9 | | 10 |

**1**

企业代码
**W** – 万杰公司
Enterprise code
**W**-wanjie corp

**2**

箱体结构
**P** – 整体
Box structure
**P**-whole

**3**

箱体型式
**W** – 万能型
无代码 – 基本型
Box model
**W**-universal
Non-code-basic

**4**

整机结构
**E** – 双级
**EE** – 多级
无代码 – 基本型
Unit structure
**E**-double
**EE**-multistage
Non-code-basic

**5**

输入轴联接方式
**D** – 带电机法兰
无代码 – 基本型
Connector of input shaft
**D**-with motor flange
Non-code-basic

**6**

输出轴结构
**K** – 中空输出轴
无代码 – 基本型
Structure of output shaft
**k**-hollow
Non-code-basic

**7**

输出、输入轴置式
**A**–入轴在下 **S**–入轴在上
**O**–出轴向上 **X**–出轴向下
**T**–入轴向上 **V**–入轴向下
无代码 – 万能型
Arrangement of input or output shaft
**A**-input shaft is below
**S**-input shaft is above
**O**-output shaft is upward
**X**-output shaft is downward
**T**-input shaft is upward
**V**-input shaft is downward
Non-code-universal

**8**

规 格
以中心距表示
**50-80**
Size signed by center distance
**50-80**

**9**

传 动 比
**600**
Ratio
**600**

**10**

轴 指 向
按产品样本轴指向图选定 B
Selecting it according to Shaft direction figur -e in this manual
**B**

# 4 .选 型 方 法

## 4. Selection Methods

## 4.1 选型要素

### 4.1.1 输入功率、输出转矩

输入功率和输出转矩的转换公式如下：

输入功率 P(KW)= 输出转矩　T(N.m)×输出轴转速 $N_2$(r/min)/(9549×效率 η)

减速机输入功率为减速机的输入动力容量，输出转矩为减速机许用承载能力，均在产品的各“功率、转矩”表中列出，可供选型时参照选用。

### 4.1.2 输入轴转速、输出轴转速

输入轴和输出轴转速公式如下：

输出轴转速　$N_2$(r/min)= 输入轴转速 $N_1$(r/min)/ 传动比 i

当减速机以皮带轮、链轮及联轴器传动时，输入轴转速不宜超过2000(r/min),一般转速范围600~1800(r/min),转速 过高易使轴承加重磨擦而缩短寿命。

### 4.1.3 效率

效率计算公式如下：

效率 η =(输出功率 / 输入功率)×100%

由于减速机运转时内部存在磨擦及振动、部分输入能量将转化为热能等非工作消耗，效率就是减速机输入能量的利用率，效率的高低取决于蜗杆头数、蜗杆转速、润滑油粘度、轴承磨擦阻力及蜗轮副材质的磨擦系数等。每种规格、传动比的减速机，其效率数值各不相同，下表列出效率的一般范围数值，可供选型时参考：

| 速 比 | 1/10 | 1/15 | 1/20 | 1/25 | 1/30 | 1/40 | 1/50 | 1/60 |
|---|---|---|---|---|---|---|---|---|
| 效 率 | 77~90% | 76~88% | 75~84% | 72~82% | 68~82% | 64~75% | 62~72% | 60~71% |

### 4.1.4 输入轴、输出轴回转方向

蜗杆减速机输出轴回转方向取决于蜗杆螺牙方向，基本型蜗杆减速机均为右旋螺牙，以本公司产品样本上WPA 照片为依据，面对输入轴、输出轴观看，当输入轴顺时针方向旋转时，输出轴旋转方向为逆时针；以WPS照片为依据，面对输入轴、输出轴观看，当输入轴顺时针方向旋转时，输出轴旋转方向为顺时针；或参照图例4.1。其余各种输出轴装配结构可按以上方法判定转向。当按特殊需要蜗杆螺牙方向制成左旋时,情况正好相反。

图例4.1(Cutline 4.1)

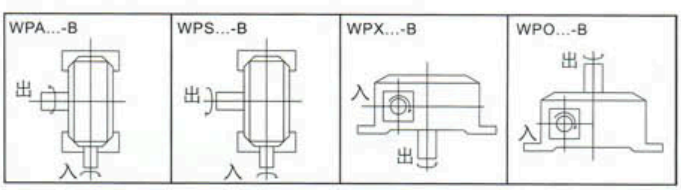


### 4.1.5 工况系数

减速机在设计时，其输入动力容量及许用承载能力的强度计算按照每天连续运转八小时、载荷稳定不变的理想工况设定，在实际使用时，现场工况（如：是否有反复启动停止或频繁正反转，使用时间是否少于或多于八小时，冲击载荷大小及特性）可能与理想工况相差甚远，在选型时应予充分考虑，在选用减速机输入功率或输出转矩时，可按下列公式加以修正：

修正输出转矩$T_2$(N.m)= 理论输出转矩$T_1$(N.m)×工况系数K

工况系数 K 值表

| 原动机 | 载荷状况 | 每日运转时间（小时） | | | |
|---|---|---|---|---|---|
| | | 0.5~2 | 2~6 | 6~10 | 10~24 |
| 电动机 | 平稳载荷 | 0.80 | 0.90 | 1.00 | 1.25 |
| | 中等冲击 | 0.90 | 1.00 | 1.25 | 1.50 |
| | 较大冲击 | 1.00 | 1.25 | 1.50 | 1.75 |
| 注: 当正反转或停开次数1 小时内达 10 次以上时，上表 K 值还应乘以1.2 | | | | | |

## 4.1 Selection points

### 4.1.1 Input power & output torque

The formula of transforming input power to output torque listed as follows:

input power P(kW)= output torqueT(N.m)× output revolving speed $N_2$(r/min)/(9549× efficiency η)

Input power denotes the dynamical capacity of a reducer, and output torque denotes the maximum load a reducer allows, which are both listed in power and torque tables in order to serving selection.

### 4.1.2 Revolving speed of input shaft and output shaft

The formula of transforming input revolving speed to output listed as follows:

Output revolving speed $N_2$(r/min)= input revolving speed N1(r/min)/ratio i

With belt–pulley, couplings or sprocket wheel shaft transmission, the input speed should not exceed 2000(r/min);the general range is 600~1800RPM. If the revolving speed is too high, the bearing will have less life due to over–friction.

### 4.1.3 Efficiencies

The efficiency calculation formula listed as follows:

Efficiency η =output power × 100%/input power

Due to the internal vibration and wear, partial input energy will be transformed to be heat energy and fade away, Efficiency is the utilization ratios of input energy. The efficiency depends on worm's tooth number, revolving speed, lubricant oil viscidity,bearing friction and worm gear's material friction factor,Reducers with vary model or ratio have vary efficiency.The following table lists the range of the efficiency value.

| Ratio | 1/10 | 1/15 | 1/20 | 1/25 | 1/30 | 1/40 | 1/50 | 1/60 |
|---|---|---|---|---|---|---|---|---|
| Efficiency | 77~90% | 76~88% | 75~84% | 72~82% | 68~82% | 64~75% | 62~72% | 60~71% |

### 4.1.4 Revolving direction of input and output shaft

The revolving direction of output shaft relies on worm thread's direction; right–directed thread is for basic use. According to the photograph of WPA in our product manual, facing input shaft and output shaft, when input shaft is in clockwise, output shaft is in counter–clockwise;and according to the photograph of WPS, facing input shaft and output shaft, when input shaft is in clockwise, output shaft is in clockwise too; for other output shaft assembly structure,the method of ensuring revolving direction is as above or the cutline 4.1.It will be adverse when the worm shaft is left–directed.

### 4.1.5 Service Factor

When reducer is designed, the input load capacity and allowed intensity are calculated a continual operation of 8 hours a day and the ideal conditions of a uniform load design. However, the on–site use (e.g. repetitive start–up, stop or obverse and reverse rotation, use time more or less than 8 hours a day,different value and

characteristics of impact load from standard conditions and so on)may be different from ideal use which should be taken into account. While selecting reducer input power or output torque, revise them according to the following formula:

Revised output torque T2(N.m)=theoretic output torque T1(N.m) × running condition factor K

## Table of Service factor K

| Prime mover | Load | Operation time per day(hour) | | | |
|---|---|---|---|---|---|
| | | 0.5~2 | 2~6 | 6~10 | 10~24 |
| Electromotor | Uniform | 0.80 | 0.90 | 1.00 | 1.25 |
| | Medium shock | 0.90 | 1.00 | 1.25 | 1.50 |
| | Heavy shock | 1.00 | 1.25 | 1.50 | 1.75 |
| Annotate: when the times of start-up, stop or obverse per hour is more than 10, the value K must multiply 1.2. | | | | | |

### 4.1.6 产品标准颜色
### Standard Color Of Products

代码 code　　颜色 color

Y

G

B

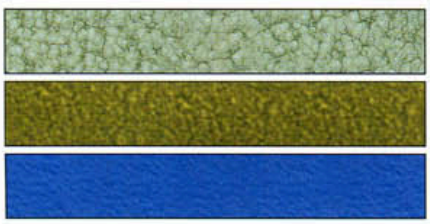

注：1.常规减速机颜色为G
Colour of normal reducer is G
2.印刷原因，颜色与实物稍有差异
Due to printing limitation the color do not match the actual products exactly.

## 4.2 选型实例

基本情况

| 传　动　结　构 | 相　关　数　据 |
|---|---|
| 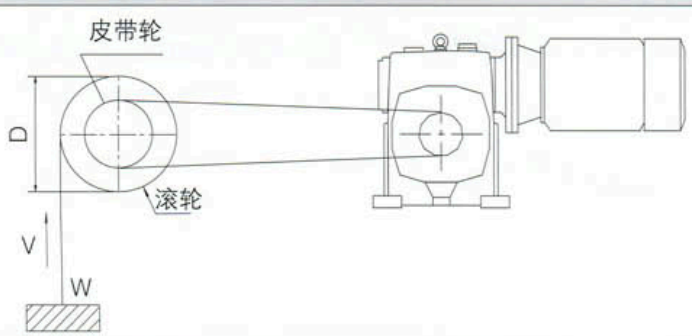 | ● 起吊物体重量　W=600kg |
| | ● 起吊物体速度　V=12m/min |
| | ● 滚轮直径　D=0.4m |
| | ● 皮带轮传动效率 $\eta_1$=0.92 |
| | ● 减速机传动效率 $\eta_2$=0.71 |
| | ● 运转时间　8小时 / 日 |
| | ● 启动次数　2 次 / 小时，较大冲击 |
| | ● 使用电源　三相 380V,50Hz |



## 4.2 Selection example

The basic condition

| Transmission structure | relative data |
|---|---|
| 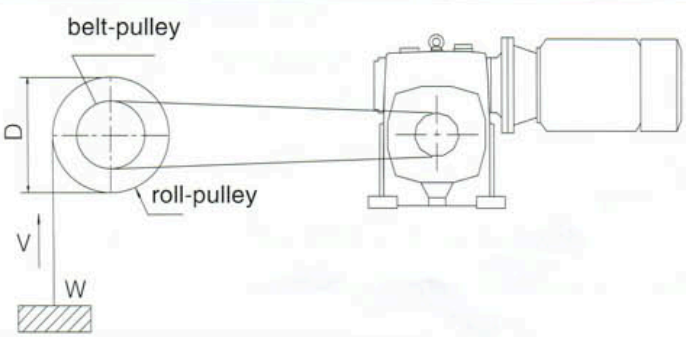 | ● weight of suspended object　W=600kg |
| | ● speed of suspended object　V=12m/min |
| | ● roll-pulley diameter　D=0.4m |
| | ● efficiency of belt-pulley　$\eta_1$=0.92 |
| | ● efficiency of reducer　$\eta_2$=0.71 |
| | ● running time 8 hours per day |
| | ● 2 times per hour heavy shock |
| | ● electrical source three-phase 380V, 50Hz |

选型步骤

| 序号 | 内　容 | 计 算 公 式 | 计算示例 |
|---|---|---|---|
| 1 | 定传动比 | 根据输入轴及输出轴的转速确定传动比<br>1.计算皮带轮转速 $N_3$<br>$N_3$=起吊速度V/(滚轮直径D × π)<br>2.计算总传动比 i<br>i= 输入轴转速 $N_1$/ 皮带轮转速 $N_3$<br>3.计算减速机传动比 $i_1$<br>$i_1$= 总传动比 i/ 皮带轮传动传动比 $i_2$ | 1.$N_3$ =12/(0.4 × 3.142)<br>=9.6 r/min<br>2. i=1440/ 9.6<br>=150<br>3.设定 $i_2$=5，则<br>$i_1$=150/5<br>=30 |
| 2 | 计算输出转矩 | 计算减速机输出转矩 T<br>T= 物体重量 W × 10 × 滚轮半径(D/2)/(皮带轮传动传动比 $i_2$ × 皮带轮传动效率 $\eta_1$) | T=600 × 10 × (0.4/2)/(5 × 0.92)<br>=260.9 N.m |
| 3 | 修正输出转矩 | 根据使用条件，8 小时运转、较大冲击，工况系数 K=1.5<br>计算修正输出转矩 T1<br>$T_1$ = 输出转矩 T × K | $T_1$=260.9 × 1.5<br>=391 N.m |
| 4 | 计算输入功率 | 换算功率 P<br>P=修正输出转矩 $T_1$ × 输出轴转速N2/(9549 × 减速机传动效率 $\eta_2$) | P=391 × (1440/30)/(9549 × 0.71)<br>=2.77kW |
| 5 | 选型号规格 | 根据产品样本，选定型号120，传动比 1/30.输入轴功率3KW.输出轴转矩 413N.m | |

## Selection steps

| Number | Contents | Formula | Example |
|---|---|---|---|
| 1 | Calculate ratio | calculate the ratio according to input and output shaft revolving speed<br>1. get belt-pulley revolving speed $N_3$<br>$N_3$=speed of suspended object V/(roll-pulley diameter D × π)<br>2.Calculate general ratio i<br>i=Input revolving speed $N_1$/belt-pulley revolvling speed $N_3$<br>3.Calculate reducer ratio $i_1$<br>$i_1$=general ratio i/belt-pulley ratio $i_2$ | 1.$N_3$ =12/(0.4 × 3.142)<br>=9.6 r/min<br>2.i=1440/9.6<br>=150<br>3.assume $i_2$=5,then<br>$i_1$=150/5<br>=30 |
| 2 | Calculate output torque | Calculate reducer output torque T<br>T=weight of suspended object W × 10 × roll-pulley radius (D/2) /(belt-pulley ratio $i_2$ × belt-pulley transmission efficiency $\eta_1$) | T=600 × 10 × (0.4/2)/(5 × 0.92)<br>=260.9N.m |
| 3 | Revise output torque | according to using condition: operation 8 hours a day, heavy shock, running condition factor K=1.5<br>calculate revised torque $T_1$　$T_1$=output torque T × k | $T_1$ =260.9 × 1.5<br>=391N.m |
| 4 | Calculate input power | Calculate input shaft power P<br>P= revised output torque $T_1$ × output revolving speed $N_2$/ (9549 × reducer transmission efficiency $\eta_2$) | P=391 × (1440/30)/(9549 × 0.71)<br>=2.77KW |
| 5 | Select model | According to product manual, the selection is, Model 120, ratio 1/30, rating input power 3kW, output torque 413N.m | |

# 5. 选型参数

## 5. Dynamical Capacity Table

### WP. WPK. WPW. WPWK (A.S.X.O.T.V)型输入轴功率及输出轴转矩表 Input and output

输入轴转速 Speed of input shaft:1500r/min

| 功率及转矩 power and torque / 传动比 ratio / 型号 size | 输入轴功率 Input (kW) | | | | | | | | 输出轴转矩 Output (N.m) | | | | | | | |
|---|---|---|---|---|---|---|---|---|---|---|---|---|---|---|---|---|
| | 10 | 15 | 20 | 25 | 30 | 40 | 50 | 60 | 10 | 15 | 20 | 25 | 30 | 40 | 50 | 60 |
| 40 | 0.40 | 0.33 | 0.26 | 0.24 | 0.22 | 0.16 | 0.14 | 0.12 | 19 | 23 | 20 | 25 | 25 | 20 | 22 | 20 |
| 50 | 0.65 | 0.52 | 0.40 | 0.37 | 0.34 | 0.27 | 0.24 | 0.20 | 31 | 36 | 32 | 38 | 39 | 36 | 37 | 35 |
| 60 | 1.00 | 0.82 | 0.65 | 0.59 | 0.54 | 0.45 | 0.40 | 0.32 | 50 | 58 | 56 | 68 | 62 | 71 | 75 | 59 |
| 70 | 1.60 | 1.35 | 1.10 | 0.96 | 0.82 | 0.67 | 0.61 | 0.52 | 83 | 98 | 101 | 112 | 99 | 104 | 113 | 97 |
| 80 | 2.20 | 1.78 | 1.36 | 1.28 | 1.20 | 0.90 | 0.80 | 0.75 | 113 | 133 | 120 | 149 | 151 | 140 | 145 | 146 |
| 100 | 3.60 | 3.10 | 2.60 | 2.35 | 2.10 | 1.68 | 1.30 | 1.00 | 193 | 237 | 258 | 284 | 277 | 291 | 257 | 229 |
| 120 | 5.20 | 4.35 | 3.50 | 3.25 | 3.00 | 2.20 | 1.90 | 1.50 | 262 | 336 | 361 | 404 | 413 | 392 | 399 | 355 |
| 135 | 9.75 | 7.85 | 6.00 | 5.50 | 5.00 | 3.69 | 2.89 | 2.30 | 540 | 622 | 619 | 696 | 707 | 667 | 626 | 562 |
| 147 | 10.71 | 8.43 | 6.18 | 5.71 | 5.23 | 3.84 | 3.09 | 2.52 | 586 | 676 | 637 | 727 | 739 | 694 | 669 | 616 |
| 155 | 12.80 | 9.90 | 7.00 | 6.53 | 6.00 | 4.40 | 3.61 | 3.00 | 709 | 785 | 722 | 842 | 848 | 784 | 770 | 791 |
| 175 | 17.30 | 13.60 | 10.00 | 9.13 | 8.30 | 6.18 | 4.85 | 4.07 | 958 | 1091 | 1044 | 1221 | 1189 | 1133 | 1127 | 1078 |
| 200 | 22.60 | 18.20 | 13.86 | 12.75 | 11.67 | 8.78 | 6.71 | 5.58 | 1280 | 1477 | 1482 | 1643 | 1782 | 1654 | 1516 | 1449 |
| 250 | 33.20 | 27.40 | 21.60 | 20.00 | 18.43 | 14.00 | 10.43 | 8.62 | 1881 | 2266 | 2310 | 2579 | 2745 | 2674 | 2357 | 2371 |

注：型号 147 暂无 WPW (A.S.X.O.T.V)及 WPWK (A.S.O.T.V)

### WPD.WPDK.WPWD.WPWDK.(A.S.X.O.T.V)型输入轴功率及输出轴转矩表 Input and output

输入轴转速Speed of input shaft:1500r/min （配用AO2或Y系列电机 Matching electric motor series AO2 or Y)

| 功率及转矩 power and torque / 传动比 ratio / 型号 size | 输入轴功率 Input (kW) | | | | | | | | 输出轴转矩 Output (N.m) | | | | | | | |
|---|---|---|---|---|---|---|---|---|---|---|---|---|---|---|---|---|
| | 10 | 15 | 20 | 25 | 30 | 40 | 50 | 60 | 10 | 15 | 20 | 25 | 30 | 40 | 50 | 60 |
| 40 | 0.12 | | | | | | | | 6 | 8 | 9 | 13 | 14 | 15 | 19 | 20 |
| 50 | 0.18 | | | | | | | | 9 | 12 | 14 | 19 | 20 | 24 | 28 | 34 |
| 60 | 0.37 | | | | | | | | 19 | 26 | 34 | 42 | 42 | 58 | 67 | 73 |
| 70 | 0.75 | | | | | 0.37 | | | 39 | 54 | 70 | 87 | 95 | 58 | 68 | 70 |
| 80 | 1.5 | | | | | 0.75 | | | 77 | 112 | 142 | 174 | 189 | 117 | 136 | 146 |
| 100 | 1.5 | | | | | | | | 80 | 115 | 149 | 181 | 198 | 260 | 307 | 344 |
| 120 | 3 | | | | | 2.2 | | | 151 | 232 | 310 | 372 | 413 | 392 | 480 | 521 |
| 135 | 4 | | | | | 3 | | | 219 | 321 | 413 | 509 | 565 | 542 | 649 | 690 |
| 147 | 4 | | | | | 3 | | | 219 | 321 | 413 | 509 | 565 | 542 | 649 | 690 |
| 155 | 5.5 | | | | | 4 | | | 305 | 411 | 525 | 709 | 760 | 713 | 853 | 1039 |
| 175 | 7.5 | | | | | 5.5 | | | 415 | 602 | 783 | 1002 | 1074 | 1008 | 1278 | 1450 |
| 200 | 11 | | | | | 7.5 | | | 623 | 892 | 1176 | 1417 | 1680 | 1413 | 1695 | 1948 |
| 250 | 15 | | | | | 11 | | | 850 | 1246 | 1604 | 1933 | 2234 | 2101 | 2486 | 3025 |

注：型号 147 暂无 WPW (A.S.X.O.T.V)及 WPWDK(A.S.O.T.V)

# WPE. WPEK. WPWE. WPWEK
# WPED. WPEDK. WPWED. WPWEDK (A.S.X.O) 型

## 输入轴功率及输出轴转矩表 Input and output

输入轴转速 Speed of Input shaft:1500r/min

| 型号 size | 功率及转矩 power and torque | WPE、WPEK、WPWE、WPWEK | | | | | | | WPED、WPEDK、WPWED、WPWEDK | | | | | | |
|---|---|---|---|---|---|---|---|---|---|---|---|---|---|---|---|
| | | 传动比 ratio | | | | | | | 传动比 ratio | | | | | | |
| | | 200 | 300 | 400 | 500 | 600 | 800 | 900 | 200 | 300 | 400 | 500 | 600 | 800 | 900 |
| 40-70 | 输入轴功率 (kW) | 0.48 | 0.34 | 0.28 | 0.25 | 0.23 | 0.20 | 0.17 | 0.12 | 0.12 | 0.12 | 0.12 | 0.12 | 0.12 | 0.12 |
| | 输出轴转矩 (N.m) | 250 | 250 | 250 | 250 | 250 | 250 | 250 | 63 | 88 | 107 | 120 | 130 | 150 | 177 |
| 50-80 | 输入轴功率 (kW) | 0.65 | 0.51 | 0.42 | 0.38 | 0.31 | 0.29 | 0.25 | 0.18 | 0.18 | 0.18 | 0.18 | 0.18 | 0.18 | 0.18 |
| | 输出轴转矩 (N.m) | 350 | 350 | 350 | 350 | 350 | 350 | 350 | 97 | 124 | 150 | 166 | 203 | 217 | 252 |
| 60-100 | 输入轴功率 (kW) | 0.95 | 0.67 | 0.52 | 0.44 | 0.40 | 0.35 | 0.33 | 0.37 | 0.37 | 0.37 | 0.37 | 0.37 | 0.37 | 0.37 |
| | 输出轴转矩 (N.m) | 500 | 500 | 500 | 500 | 500 | 500 | 500 | 195 | 276 | 356 | 420 | 463 | 529 | 561 |
| 70-120 | 输入轴功率 (kW) | 1.64 | 1.18 | 0.91 | 0.84 | 0.71 | 0.58 | 0.54 | 0.75 | 0.75 | 0.75 | 0.75 | 0.37 | 0.37 | 0.75 |
| | 输出轴转矩 (N.m) | 840 | 840 | 840 | 840 | 840 | 840 | 840 | 384 | 534 | 692 | 750 | 486 | 536 | 887 |
| 80-135 | 输入轴功率 (kW) | 2.50 | 1.75 | 1.39 | 1.19 | 1.08 | 0.98 | 0.85 | 1.5 | 1.5 | 1.5 | 1.5 | 0.75 | 0.75 | 1.5 |
| | 输出轴转矩 (N.m) | 1400 | 1400 | 1400 | 1400 | 1400 | 1400 | 1400 | 616 | 880 | 1108 | 1294 | 1010 | 1071 | 1426 |
| 80-147 | 输入轴功率 (kW) | 2.79 | 2.1 | 1.71 | 1.47 | 1.34 | 1.20 | 1.06 | 1.5 | 1.5 | 1.5 | 1.5 | 0.75 | 0.75 | 1.5 |
| | 输出轴转矩 (N.m) | 1575 | 1575 | 1575 | 1575 | 1575 | 1575 | 1575 | 662 | 902 | 1208 | 1316 | 1300 | 1321 | 1575 |
| 100-155 | 输入轴功率 (kW) | 3.69 | 2.92 | 2.41 | 2.07 | 1.89 | 1.69 | 1.50 | 1.5 | 1.5 | 1.5 | 1.5 | 1.5 | 1.5 | 1.5 |
| | 输出轴转矩 (N.m) | 2100 | 2100 | 2100 | 2100 | 2100 | 2100 | 2100 | 854 | 1079 | 1307 | 1522 | 1667 | 1864 | 2100 |
| 120-175 | 输入轴功率 (kW) | 5.09 | 3.91 | 3.27 | 2.72 | 2.53 | 2.50 | 2.05 | 3 | 3 | 3 | 3 | 2.2 | 2.2 | 3 |
| | 输出轴转矩 (N.m) | 3050 | 3050 | 3050 | 3050 | 3050 | 3050 | 3050 | 1798 | 2340 | 2798 | 3050 | 2500 | 2685 | 3050 |
| 135-200 | 输入轴功率 (kW) | 7.22 | 5.41 | 4.46 | 3.83 | 3.46 | 2.91 | 2.71 | 4 | 4 | 4 | 4 | 3 | 3 | 4 |
| | 输出轴转矩 (N.m) | 3950 | 3950 | 3950 | 3950 | 3950 | 3950 | 3950 | 2188 | 2920 | 3543 | 3950 | 3950 | 3950 | 3950 |
| 155-250 | 输入轴功率 (kW) | 11.71 | 8.14 | 6.00 | 5.14 | 4.67 | 4.07 | 3.67 | 5.5 | 5.5 | 5.5 | 5.5 | 4 | 4 | 5.5 |
| | 输出轴转矩 (N.m) | 6050 | 6050 | 6050 | 6050 | 6050 | 6050 | 6050 | 2841 | 4087 | 5546 | 6050 | 6050 | 6050 | 6050 |

注：型号 80-147 暂无 WPW E(A.S.X.O.)及 WPWEK(A.S.O.)

## 润滑油注油量（L）Adding Capacity of lubrication oil

| 型号 Size \ 机型 Type | WP(D、K)A | WP(D、K)S | WP(D、K)X、O | WPW(D) |
|---|---|---|---|---|
| 40 | 0.1 | 0.2 | 0.2 | 0.2 |
| 50 | 0.2 | 0.4 | 0.5 | 0.4 |
| 60 | 0.3 | 0.5 | 0.6 | 0.5 |
| 70 | 0.6 | 0.9 | 1.2 | 0.8 |
| 80 | 1 | 1.3 | 1.5 | 1.5 |
| 100 | 1.7 | 2.7 | 3.9 | 2.6 |
| 120 | 2.8 | 4.5 | 5.8 | 4.5 |
| 135 | 4.5 | 7.2 | 8.6 | 5.6 |
| 147 | 4.2 | 7 | 11.1 | - |
| 155 | 5.9 | 10.3 | 14.2 | 11.7 |
| 175 | 7.5 | 12.1 | 16.7 | 13.9 |
| 200 | 12.2 | 18.9 | 27.2 | 16.7 |
| 250 | 22 | 33.9 | 48.9 | 30 |

# 6. 使用说明

## 6.1 安装注意事项

6.1.1 减速机须安装在平整坚固的底座上，底脚螺栓必须紧固、防震。

6.1.2 原动机 -- 减速机 -- 工作机的各联接轴伸，安装后必须互相准确对准轴线。

6.1.3 减速机输入端及输出端轴伸外径公差尺寸均按 h6 制作，与之相配的联轴器、皮带轮、链轮等传动件内孔须按合适的公差尺寸配制，避免装配过紧损坏轴承，装配过松影响正常动力传递。

6.1.4 链轮、齿轮等传动件装上轴伸时，应尽量靠近轴承，以减少轴伸弯曲应力。

6.1.5 WPD 型减速机装配电机时，应在蜗杆头部内孔孔壁及键槽处涂抹黄油，避免装配过紧，防止轴孔日久生锈。

6.1.6 订购使用各类 WPD 减速机时，若电机重量偏大，应设支撑装置。

## 6.2 使用注意事项

6.2.1 使用前应注意检查减速机型式结构、中心距规格、传动比、输入轴连接方式、输出轴结构、输入轴输出轴轴指向和回转方向等是否符合使用要求。

6.2.2 按照样本上“油品润滑”中所规定的要求，注入合适的品种牌号润滑油。加油后，旋紧顶部的通气器，拔掉通气器上之小锥塞，减速机方可开始运转，必须选用合适牌号的润滑油，必须控制适宜的加油量，必须按规定要求及时换油，尤其要重视首次使用 100 小时后的更换新油。

6.2.3 使用过程中发生不正常情况时，应及时停机检查，可参照“故障分析”表处理。(减速机的油温最高允许达到 95 ℃，在此温度界限下，只要油温不再上升，可以放心使用）。

# 6. Installation & Usage

## 6.1 Notices of installation

6.1.1 The base-plate must be plane and stoutness, and the base-bolts must be screwed down and shockproof.

6.1.2 The connecting shafts of prime mover, reducer and operation device must be coaxial after installation.

6.1.3 The diameter tolerance zone of input and output shaft is h6, the holes of fittings (such as couplings, belt-pulley, sprocket wheel and so on )must properly mate the shaft, which prevents bearing from breakage because of over-tight mate or avoid effecting normal power transmission because of over-loose mate.

6.1.4 Drivers such as sprocket wheel and gear must be fitted close to bearings in order to reduce bending stress of hanging shaft.

6.1.5 While assembling motor of WPD reducer, it is necessary that proper amount of butter applies to the worm shaft input hole and keyway, avoiding assembling too tightly and rusting after using for a long time.

6.1.6 When Ordering and using all kinds of WPD type, if the motor weight is bigger than the common, Supporting set is required.

## 6.2 Notices of usage

6.2.1 Before using, please check carefully whether the reducer model, distance, ratio, input connecting method, output shaft structure,input and output shaft direction and revolving direction accord with requirement.

6.2.2 According to the requirement of " lubricant " in the product manual, please fill proper category and brand lub-ricant. And then screw on the vent-plug, uncork the small cone-plug of vent-plug. Only After doing these, reducer is ready for starting up running. The proper brand and adequate lubricant oil is required;replacing oil in time conforming to the request of product manual is also necessary, especially after using first 100 hours, it is required refilling new oil.

6.2.3 When abnormal circumstances occur, please stop and check reducer per "Malfunctions Analysis"(allowable highest oil temperature is 95℃, under this temperature limit,if oil temperature no more goes up,please let reducer continue running).

# 7. 油品润滑
# 7. Lubricant

蜗杆减速机使用前应注入 N220~N320 (环境温度 -30℃~40℃)或N320~N460(环境温度25℃~65℃)润滑油至油标中心点之上，并取掉通气器上之小锥塞。首次使用100小时后，洗净内部更换新油，以后每2500小时换油一次。

Before operation,input N220~N320(Ambient temperature -30℃~40℃)、N320~N460(Ambient temperature 25℃~65℃) lubrication oil up to the center line of the oil gauge. In the meanwhile, remove the small screw of the air-vent. After working for 100 hours in the first time, clear the inside and add new lubrication oil in it , then renew the lubricant oil per 2500 hours.

减速机在使用时，可按下表选用润滑油，加油量参照润滑油注油量表。
Lubricants for a reducer are optional in foreign as the below table. Adding oil according to capacity of lubrication oil.

| Worm shaft speed (r/min) | | Lubricant | Operating position Worm shaft,upper Worm shaft vertical | Operating position Worm shaft,lower Output shaft vertical |
|---|---|---|---|---|
| over | up to | | | |
| 1000 | 3000 | Synthetic oils | PG460 | PG220 |
| | 1000 | | | PG460 |
| 2000 | 3000 | Mineral oils | ISO VG460 | ISO VG220 |
| 750 | 2000 | | | ISO VG320 |
| 250 | 750 | | | ISO VG460 |
| | 250 | | ISO VG680 | ISO VG680 |

| 周围温度 Ambient Temp | 负荷 Load | ISO VG | GB3141-82 | Shell | Mobil | AGMA | 中国石化 |
|---|---|---|---|---|---|---|---|
| -30℃ ~ -15℃ | 普通 Commonly | VG-100 | N100 | Shell Tivela S100 | Gear 627 × P | 5 | CKE/P100 |
| | 重 Weight | VG-150 | N150 | Shell Tivela S150 | Gear 629 × P | 7 | CKE/P150 |
| -15℃ ~5℃ | 普通 Commonly | VG-150 | N150 | Shell Tivela S150 | Gear 629 × P | 7 | CKE/P150 |
| | 重 Weight | VG-220 | N220 | Shell Tivela S220 | Gear 630 × P | 7EP | CKE/P220 |
| 5℃ ~ 25℃ | 普通 Commonly | VG-220 | N220 | Shell Tivela S320 | Gear 630 × P | 7EP | CKE/P220 |
| | 重 Weight | VG-320 | N320 | Shell Tivela S320 | Gear 632 × P | 6 | CKE/P320 |
| 25℃ ~ 40℃ | 普通 Commonly | VG-320 | N320 | Shell Tivela S320 | Gear 632 × P | 6 | CKE/P320 |
| | 重 Weight | VG-460 | N460 | Shell Tivela S460 | Gear 634 × P | 8 | CKE/P460 |
| 40℃ ~ 65℃ | 普通 Commonly | VG-460 | N460 | Shell Tivela S460 | Gear 634 × P | 8 | CKE/P460 |
| | 重 Weight | VG-680 | N680 | Shell Tivela S680 | Gear 636 × P | 8EP | CKE/P680 |

After the first 100 hours of operation:
Drain unit and flush with light oil. Refill.

Every 2500 hours of operation:
Drain unit and flush with light oil. Refill.

# 8. 故障分析

| 故障情况 | 故障原因 | 解决办法 |
| --- | --- | --- |
| 过 热 | 原动机、减速机、工作机连接不当 | 调整至适当位置，使三者相联轴线同轴 |
| | 超负荷运转 | 适当调整负荷 |
| | 油封过度磨擦 | 在油封唇口处滴润滑油 |
| | 润滑油过少或过多 | 按油标指示点调整油量 |
| | 润滑油杂质多或润滑性差 | 更换合适新油 |
| 振 动 | 原动机、减速机、工作机固定不良 | 查出固定不良部位，正确固紧 |
| | 蜗轮副齿部磨耗或损伤 | 更换蜗轮副 (需要时本公司配合) |
| | 轴承磨损 | 更换轴承 |
| | 螺栓松脱 | 固紧螺栓 |
| 杂 音 | 轴承损伤或间隙过大 | 更换轴承 |
| | 蜗轮副啮合不良 | 修整齿面或更换蜗轮副 (请与本公司联系) |
| | 润滑油不足 | 按油标指示点补加润滑油 |
| | 机体内有异物 | 倒净润滑油带出异物，重加清洁润滑油 |
| 漏 油 | 油封唇口磨损 | 更换油封 |
| | 油封档轴颈磨损 | 更换输出轴或输入轴 |
| | 油量过多 | 按油标指示点调整油量 |
| | 放油螺塞未旋紧 | 螺纹处加密封胶、旋紧螺塞 |
| | 油标破损 | 更换油标 |
| 蜗轮副齿面磨损过快 | 超负荷运转 | 调整至适当负荷 |
| | 润滑油不符合要求 | 更换合适的润滑油 |
| | 润滑油不足 | 按油标指示点加足润滑油 |
| | 未按规定适时换油，润滑油劣化 | 按规定要求适时换油 |
| | 运转温度过高 | 1. 按“过热”故障处理<br>2. 采取合适措施，降低环境温度 |

注：如果发生其他故障无法解决时，请随时与我们联系，以便提供咨询服务。

# 8. Malfunctions Analysis

| Fault Description | Reasons | Solutions |
|---|---|---|
| Overheating | Improper connection among prime mover, reducer and the operation device | Adjust to proper position |
| | Overloading | Adjust to proper load |
| | Over friction of oil seals | Drop lubricant at oil seal |
| | Lubricant oil overmuch or shortage | Adjust to proper oil quantity as indication |
| | Much impurity in oil or inferior oil | Refill proper oil |
| Vibration | Prime mover, reducer and the operation device mount badly | Find out the bad place,tighten it |
| | Tooth surface of worm gear sets worn-out or damaged | Replace worm gear sets(we will cooperate with you when necessary) |
| | Bearing worn-out | Replace Bearing |
| | Bolt loose | Tighten Screw |
| Noise | Bearing damaged or too large clearance | Replace Bearing |
| | Worm gear sets mesh badly | Mend tooth surface or replace worm gear sets (please contact to us) |
| | Lubricant oil shortage | Fill in adequate oil as indication |
| | Foreign object in box | Discharge all the oil in order to put out foreign object, and refill clean oil |
| Oil leakage | Oil seal lip worn-out | Replace oil seal |
| | Shaft of oil seal area worn-out | Replace input or output shaft |
| | Too much oil | Discharge adequate oil as indication |
| | Oil screw plug loose | Tighten oil screw plug |
| | Oil gauge damaged | Replace oil gauge |
| Tooth surface of worm gear sets abrade extra-quickly | Overload | Adjust to proper loading |
| | Lubricant oil not according with requirement | Replace proper lubricant oil |
| | Lubricant oil shortage | Fill adequate oil as indication |
| | Not replacing lubricant oil in time according to requirement, oil deteriorates | Replacing oil in time according to requirement |
| | Overheating while running | 1. Deal with it as "Overheating"<br>2. Adopting proper measures to make environment temperature fall |

Annotate:If other faults not listed above occur,Please contact with us at any moment,Our company will supply thorough consultation and service.