1. 产品结构

1. Product structure

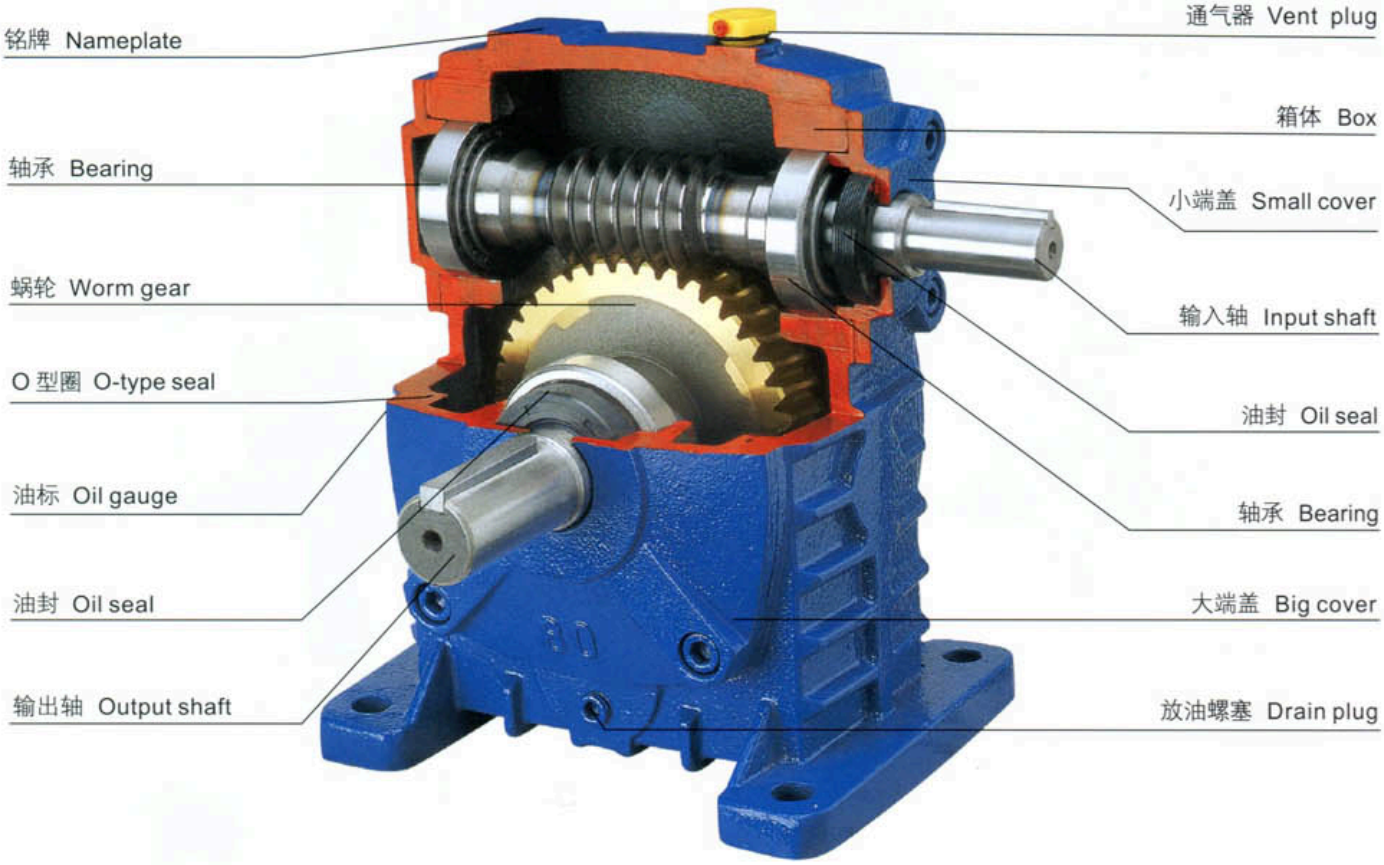

2. 型号说明

2. Model Instructions

W	P	W	E	D	K	A	50-80	—	600	—	B
1	2	3	4	5	6	7	8		9		10

1

企业代码
W – 万杰公司
Enterprise code
W-wanjie corp

2

箱体结构
P – 整体
Box structure
P-whole

3

箱体型式
W – 万能型
无代码 – 基本型
Box model
W-universal
Non-code-basic

4

整机结构
E – 双级
EE – 多级
无代码 – 基本型
Unit structure
E-double
EE-multistage
Non-code-basic

5

输入轴联接方式
D – 带电机法兰
无代码 – 基本型
Connector of input shaft
D-with motor flange
Non-code-basic

6

输出轴结构
K – 中空输出轴
无代码 – 基本型
Structure of output shaft
k-hollow
Non-code-basic

7

输出、输入轴置式
A–入轴在下 **S**–入轴在上
O–出轴向上 **X**–出轴向下
T–入轴向上 **V**–入轴向下
无代码 – 万能型
Arrangement of input or output shaft
A-input shaft is below
S-input shaft is above
O-output shaft is upward
X-output shaft is downward
T-input shaft is upward
V-input shaft is downward
Non-code-universal

8

规 格
以中心距表示
50-80
Size signed by center distance
50-80

9

传 动 比
600
Ratio
600

10

轴 指 向
按产品样本轴指向图选定 B
Selecting it according to Shaft direction figur -e in this manual
B

4 .选 型 方 法

4. Selection Methods

4.1 选型要素

4.1.1 输入功率、输出转矩

输入功率和输出转矩的转换公式如下：

输入功率 P(KW)= 输出转矩　T(N.m)×输出轴转速 N_2(r/min)/(9549×效率 η)

减速机输入功率为减速机的输入动力容量，输出转矩为减速机许用承载能力，均在产品的各“功率、转矩”表中列出，可供选型时参照选用。

4.1.2 输入轴转速、输出轴转速

输入轴和输出轴转速公式如下：

输出轴转速　N_2(r/min)= 输入轴转速 N_1(r/min)/ 传动比 i

当减速机以皮带轮、链轮及联轴器传动时，输入轴转速不宜超过2000(r/min),一般转速范围600~1800(r/min),转速 过高易使轴承加重磨擦而缩短寿命。

4.1.3 效率

效率计算公式如下：

效率 η =(输出功率 / 输入功率)×100%

由于减速机运转时内部存在磨擦及振动、部分输入能量将转化为热能等非工作消耗，效率就是减速机输入能量的利用率，效率的高低取决于蜗杆头数、蜗杆转速、润滑油粘度、轴承磨擦阻力及蜗轮副材质的磨擦系数等。每种规格、传动比的减速机，其效率数值各不相同，下表列出效率的一般范围数值，可供选型时参考：

速 比	1/10	1/15	1/20	1/25	1/30	1/40	1/50	1/60
效 率	77~90%	76~88%	75~84%	72~82%	68~82%	64~75%	62~72%	60~71%

4.1.4 输入轴、输出轴回转方向

蜗杆减速机输出轴回转方向取决于蜗杆螺牙方向，基本型蜗杆减速机均为右旋螺牙，以本公司产品样本上WPA 照片为依据，面对输入轴、输出轴观看，当输入轴顺时针方向旋转时，输出轴旋转方向为逆时针；以WPS照片为依据，面对输入轴、输出轴观看，当输入轴顺时针方向旋转时，输出轴旋转方向为顺时针；或参照图例4.1。其余各种输出轴装配结构可按以上方法判定转向。当按特殊需要蜗杆螺牙方向制成左旋时,情况正好相反。

图例4.1(Cutline 4.1)

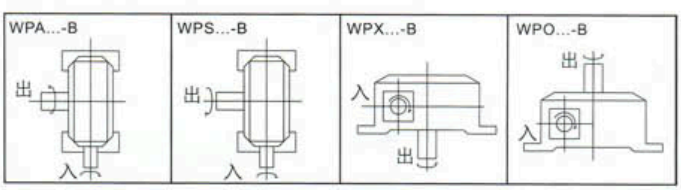

4.1.5 工况系数

减速机在设计时，其输入动力容量及许用承载能力的强度计算按照每天连续运转八小时、载荷稳定不变的理想工况设定，在实际使用时，现场工况（如：是否有反复启动停止或频繁正反转，使用时间是否少于或多于八小时，冲击载荷大小及特性）可能与理想工况相差甚远，在选型时应予充分考虑，在选用减速机输入功率或输出转矩时，可按下列公式加以修正：

修正输出转矩T_2(N.m)= 理论输出转矩T_1(N.m)×工况系数K

工况系数 K 值表

原动机	载荷状况	每日运转时间（小时）			
		0.5~2	2~6	6~10	10~24
电动机	平稳载荷	0.80	0.90	1.00	1.25
	中等冲击	0.90	1.00	1.25	1.50
	较大冲击	1.00	1.25	1.50	1.75
注: 当正反转或停开次数1 小时内达 10 次以上时，上表 K 值还应乘以1.2					

4.1 Selection points

4.1.1 Input power & output torque

The formula of transforming input power to output torque listed as follows:

input power P(kW)= output torqueT(N.m)× output revolving speed N_2(r/min)/(9549× efficiency η)

Input power denotes the dynamical capacity of a reducer, and output torque denotes the maximum load a reducer allows, which are both listed in power and torque tables in order to serving selection.

4.1.2 Revolving speed of input shaft and output shaft

The formula of transforming input revolving speed to output listed as follows:

Output revolving speed N_2(r/min)= input revolving speed N1(r/min)/ratio i

With belt–pulley, couplings or sprocket wheel shaft transmission, the input speed should not exceed 2000(r/min);the general range is 600~1800RPM. If the revolving speed is too high, the bearing will have less life due to over–friction.

4.1.3 Efficiencies

The efficiency calculation formula listed as follows:

Efficiency η =output power × 100%/input power

Due to the internal vibration and wear, partial input energy will be transformed to be heat energy and fade away, Efficiency is the utilization ratios of input energy. The efficiency depends on worm's tooth number, revolving speed, lubricant oil viscidity,bearing friction and worm gear's material friction factor,Reducers with vary model or ratio have vary efficiency.The following table lists the range of the efficiency value.

Ratio	1/10	1/15	1/20	1/25	1/30	1/40	1/50	1/60
Efficiency	77~90%	76~88%	75~84%	72~82%	68~82%	64~75%	62~72%	60~71%

4.1.4 Revolving direction of input and output shaft

The revolving direction of output shaft relies on worm thread's direction; right–directed thread is for basic use. According to the photograph of WPA in our product manual, facing input shaft and output shaft, when input shaft is in clockwise, output shaft is in counter–clockwise;and according to the photograph of WPS, facing input shaft and output shaft, when input shaft is in clockwise, output shaft is in clockwise too; for other output shaft assembly structure,the method of ensuring revolving direction is as above or the cutline 4.1.It will be adverse when the worm shaft is left–directed.

4.1.5 Service Factor

When reducer is designed, the input load capacity and allowed intensity are calculated a continual operation of 8 hours a day and the ideal conditions of a uniform load design. However, the on–site use (e.g. repetitive start–up, stop or obverse and reverse rotation, use time more or less than 8 hours a day,different value and

characteristics of impact load from standard conditions and so on)may be different from ideal use which should be taken into account. While selecting reducer input power or output torque, revise them according to the following formula:

Revised output torque T2(N.m)=theoretic output torque T1(N.m) × running condition factor K

Table of Service factor K

Prime mover	Load	Operation time per day(hour)			
		0.5~2	2~6	6~10	10~24
Electromotor	Uniform	0.80	0.90	1.00	1.25
	Medium shock	0.90	1.00	1.25	1.50
	Heavy shock	1.00	1.25	1.50	1.75
Annotate: when the times of start-up, stop or obverse per hour is more than 10, the value K must multiply 1.2.					

4.1.6 产品标准颜色
Standard Color Of Products

代码 code　　颜色 color

Y

G

B

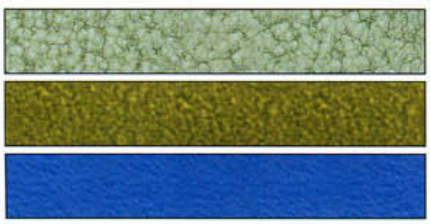

注：1.常规减速机颜色为G
Colour of normal reducer is G
2.印刷原因，颜色与实物稍有差异
Due to printing limitation the color do not match the actual products exactly.

4.2 选型实例

基本情况

传　动　结　构	相　关　数　据
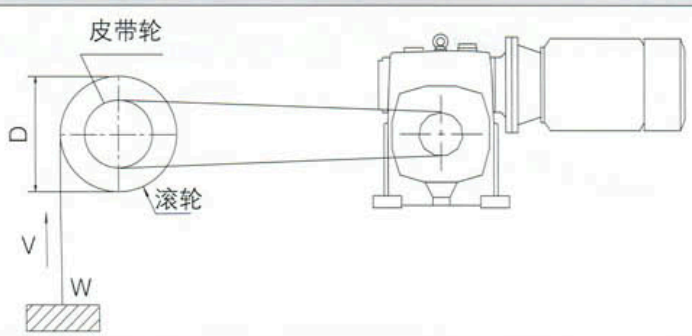	● 起吊物体重量　W=600kg
	● 起吊物体速度　V=12m/min
	● 滚轮直径　D=0.4m
	● 皮带轮传动效率 η_1=0.92
	● 减速机传动效率 η_2=0.71
	● 运转时间　8小时 / 日
	● 启动次数　2 次 / 小时，较大冲击
	● 使用电源　三相 380V,50Hz

4.2 Selection example

The basic condition

Transmission structure	relative data
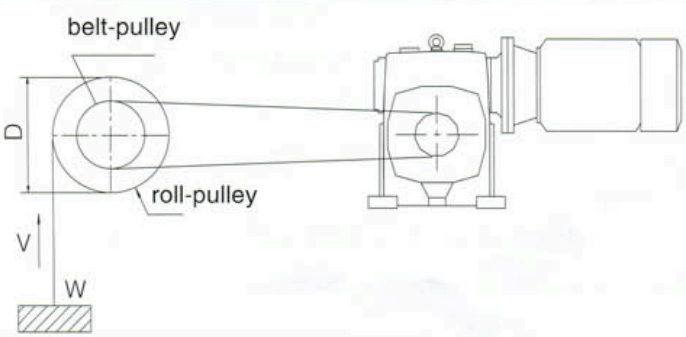	● weight of suspended object　W=600kg
	● speed of suspended object　V=12m/min
	● roll-pulley diameter　D=0.4m
	● efficiency of belt-pulley　η_1=0.92
	● efficiency of reducer　η_2=0.71
	● running time 8 hours per day
	● 2 times per hour heavy shock
	● electrical source three-phase 380V, 50Hz

选型步骤

序号	内　容	计 算 公 式	计算示例
1	定传动比	根据输入轴及输出轴的转速确定传动比 1.计算皮带轮转速 N_3 N_3=起吊速度V/(滚轮直径D × π) 2.计算总传动比 i i= 输入轴转速 N_1/ 皮带轮转速 N_3 3.计算减速机传动比 i_1 i_1= 总传动比 i/ 皮带轮传动传动比 i_2	1.N_3 =12/(0.4 × 3.142) =9.6 r/min 2. i=1440/ 9.6 =150 3.设定 i_2=5，则 i_1=150/5 =30
2	计算输出转矩	计算减速机输出转矩 T T= 物体重量 W × 10 × 滚轮半径(D/2)/(皮带轮传动传动比 i_2 × 皮带轮传动效率 η_1)	T=600 × 10 × (0.4/2)/(5 × 0.92) =260.9 N.m
3	修正输出转矩	根据使用条件，8 小时运转、较大冲击，工况系数 K=1.5 计算修正输出转矩 T1 T_1 = 输出转矩 T × K	T_1=260.9 × 1.5 =391 N.m
4	计算输入功率	换算功率 P P=修正输出转矩 T_1 × 输出轴转速N2/(9549 × 减速机传动效率 η_2)	P=391 × (1440/30)/(9549 × 0.71) =2.77kW
5	选型号规格	根据产品样本，选定型号120，传动比 1/30.输入轴功率3KW.输出轴转矩 413N.m	

Selection steps

Number	Contents	Formula	Example
1	Calculate ratio	calculate the ratio according to input and output shaft revolving speed 1. get belt-pulley revolving speed N_3 N_3=speed of suspended object V/(roll-pulley diameter D × π) 2.Calculate general ratio i i=Input revolving speed N_1/belt-pulley revolvling speed N_3 3.Calculate reducer ratio i_1 i_1=general ratio i/belt-pulley ratio i_2	1.N_3 =12/(0.4 × 3.142) =9.6 r/min 2.i=1440/9.6 =150 3.assume i_2=5,then i_1=150/5 =30
2	Calculate output torque	Calculate reducer output torque T T=weight of suspended object W × 10 × roll-pulley radius (D/2) /(belt-pulley ratio i_2 × belt-pulley transmission efficiency η_1)	T=600 × 10 × (0.4/2)/(5 × 0.92) =260.9N.m
3	Revise output torque	according to using condition: operation 8 hours a day, heavy shock, running condition factor K=1.5 calculate revised torque T_1　T_1=output torque T × k	T_1 =260.9 × 1.5 =391N.m
4	Calculate input power	Calculate input shaft power P P= revised output torque T_1 × output revolving speed N_2/ (9549 × reducer transmission efficiency η_2)	P=391 × (1440/30)/(9549 × 0.71) =2.77KW
5	Select model	According to product manual, the selection is, Model 120, ratio 1/30, rating input power 3kW, output torque 413N.m	

5. 选型参数

5. Dynamical Capacity Table

WP. WPK. WPW. WPWK (A.S.X.O.T.V)型输入轴功率及输出轴转矩表 Input and output

输入轴转速 Speed of input shaft:1500r/min

功率及转矩 power and torque / 传动比 ratio / 型号 size	输入轴功率 Input (kW)								输出轴转矩 Output (N.m)							
	10	15	20	25	30	40	50	60	10	15	20	25	30	40	50	60
40	0.40	0.33	0.26	0.24	0.22	0.16	0.14	0.12	19	23	20	25	25	20	22	20
50	0.65	0.52	0.40	0.37	0.34	0.27	0.24	0.20	31	36	32	38	39	36	37	35
60	1.00	0.82	0.65	0.59	0.54	0.45	0.40	0.32	50	58	56	68	62	71	75	59
70	1.60	1.35	1.10	0.96	0.82	0.67	0.61	0.52	83	98	101	112	99	104	113	97
80	2.20	1.78	1.36	1.28	1.20	0.90	0.80	0.75	113	133	120	149	151	140	145	146
100	3.60	3.10	2.60	2.35	2.10	1.68	1.30	1.00	193	237	258	284	277	291	257	229
120	5.20	4.35	3.50	3.25	3.00	2.20	1.90	1.50	262	336	361	404	413	392	399	355
135	9.75	7.85	6.00	5.50	5.00	3.69	2.89	2.30	540	622	619	696	707	667	626	562
147	10.71	8.43	6.18	5.71	5.23	3.84	3.09	2.52	586	676	637	727	739	694	669	616
155	12.80	9.90	7.00	6.53	6.00	4.40	3.61	3.00	709	785	722	842	848	784	770	791
175	17.30	13.60	10.00	9.13	8.30	6.18	4.85	4.07	958	1091	1044	1221	1189	1133	1127	1078
200	22.60	18.20	13.86	12.75	11.67	8.78	6.71	5.58	1280	1477	1482	1643	1782	1654	1516	1449
250	33.20	27.40	21.60	20.00	18.43	14.00	10.43	8.62	1881	2266	2310	2579	2745	2674	2357	2371

注：型号 147 暂无 WPW (A.S.X.O.T.V)及 WPWK (A.S.O.T.V)

WPD.WPDK.WPWD.WPWDK.(A.S.X.O.T.V)型输入轴功率及输出轴转矩表 Input and output

输入轴转速Speed of input shaft:1500r/min （配用AO2或Y系列电机 Matching electric motor series AO2 or Y)

功率及转矩 power and torque / 传动比 ratio / 型号 size	输入轴功率 Input (kW)								输出轴转矩 Output (N.m)							
	10	15	20	25	30	40	50	60	10	15	20	25	30	40	50	60
40	0.12								6	8	9	13	14	15	19	20
50	0.18								9	12	14	19	20	24	28	34
60	0.37								19	26	34	42	42	58	67	73
70	0.75					0.37			39	54	70	87	95	58	68	70
80	1.5					0.75			77	112	142	174	189	117	136	146
100	1.5								80	115	149	181	198	260	307	344
120	3					2.2			151	232	310	372	413	392	480	521
135	4					3			219	321	413	509	565	542	649	690
147	4					3			219	321	413	509	565	542	649	690
155	5.5					4			305	411	525	709	760	713	853	1039
175	7.5					5.5			415	602	783	1002	1074	1008	1278	1450
200	11					7.5			623	892	1176	1417	1680	1413	1695	1948
250	15					11			850	1246	1604	1933	2234	2101	2486	3025

注：型号 147 暂无 WPW (A.S.X.O.T.V)及 WPWDK(A.S.O.T.V)

WPE. WPEK. WPWE. WPWEK
WPED. WPEDK. WPWED. WPWEDK (A.S.X.O) 型

输入轴功率及输出轴转矩表 Input and output

输入轴转速 Speed of Input shaft:1500r/min

型号 size	功率及转矩 power and torque	WPE、WPEK、WPWE、WPWEK							WPED、WPEDK、WPWED、WPWEDK						
		传动比 ratio							传动比 ratio						
		200	300	400	500	600	800	900	200	300	400	500	600	800	900
40-70	输入轴功率 (kW)	0.48	0.34	0.28	0.25	0.23	0.20	0.17	0.12	0.12	0.12	0.12	0.12	0.12	0.12
	输出轴转矩 (N.m)	250	250	250	250	250	250	250	63	88	107	120	130	150	177
50-80	输入轴功率 (kW)	0.65	0.51	0.42	0.38	0.31	0.29	0.25	0.18	0.18	0.18	0.18	0.18	0.18	0.18
	输出轴转矩 (N.m)	350	350	350	350	350	350	350	97	124	150	166	203	217	252
60-100	输入轴功率 (kW)	0.95	0.67	0.52	0.44	0.40	0.35	0.33	0.37	0.37	0.37	0.37	0.37	0.37	0.37
	输出轴转矩 (N.m)	500	500	500	500	500	500	500	195	276	356	420	463	529	561
70-120	输入轴功率 (kW)	1.64	1.18	0.91	0.84	0.71	0.58	0.54	0.75	0.75	0.75	0.75	0.37	0.37	0.75
	输出轴转矩 (N.m)	840	840	840	840	840	840	840	384	534	692	750	486	536	887
80-135	输入轴功率 (kW)	2.50	1.75	1.39	1.19	1.08	0.98	0.85	1.5	1.5	1.5	1.5	0.75	0.75	1.5
	输出轴转矩 (N.m)	1400	1400	1400	1400	1400	1400	1400	616	880	1108	1294	1010	1071	1426
80-147	输入轴功率 (kW)	2.79	2.1	1.71	1.47	1.34	1.20	1.06	1.5	1.5	1.5	1.5	0.75	0.75	1.5
	输出轴转矩 (N.m)	1575	1575	1575	1575	1575	1575	1575	662	902	1208	1316	1300	1321	1575
100-155	输入轴功率 (kW)	3.69	2.92	2.41	2.07	1.89	1.69	1.50	1.5	1.5	1.5	1.5	1.5	1.5	1.5
	输出轴转矩 (N.m)	2100	2100	2100	2100	2100	2100	2100	854	1079	1307	1522	1667	1864	2100
120-175	输入轴功率 (kW)	5.09	3.91	3.27	2.72	2.53	2.50	2.05	3	3	3	3	2.2	2.2	3
	输出轴转矩 (N.m)	3050	3050	3050	3050	3050	3050	3050	1798	2340	2798	3050	2500	2685	3050
135-200	输入轴功率 (kW)	7.22	5.41	4.46	3.83	3.46	2.91	2.71	4	4	4	4	3	3	4
	输出轴转矩 (N.m)	3950	3950	3950	3950	3950	3950	3950	2188	2920	3543	3950	3950	3950	3950
155-250	输入轴功率 (kW)	11.71	8.14	6.00	5.14	4.67	4.07	3.67	5.5	5.5	5.5	5.5	4	4	5.5
	输出轴转矩 (N.m)	6050	6050	6050	6050	6050	6050	6050	2841	4087	5546	6050	6050	6050	6050

注：型号 80-147 暂无 WPW E(A.S.X.O.)及 WPWEK(A.S.O.)

润滑油注油量（L）Adding Capacity of lubrication oil

型号 Size \ 机型 Type	WP(D、K)A	WP(D、K)S	WP(D、K)X、O	WPW(D)
40	0.1	0.2	0.2	0.2
50	0.2	0.4	0.5	0.4
60	0.3	0.5	0.6	0.5
70	0.6	0.9	1.2	0.8
80	1	1.3	1.5	1.5
100	1.7	2.7	3.9	2.6
120	2.8	4.5	5.8	4.5
135	4.5	7.2	8.6	5.6
147	4.2	7	11.1	-
155	5.9	10.3	14.2	11.7
175	7.5	12.1	16.7	13.9
200	12.2	18.9	27.2	16.7
250	22	33.9	48.9	30

6. 使用说明

6.1 安装注意事项

6.1.1 减速机须安装在平整坚固的底座上，底脚螺栓必须紧固、防震。

6.1.2 原动机 -- 减速机 -- 工作机的各联接轴伸，安装后必须互相准确对准轴线。

6.1.3 减速机输入端及输出端轴伸外径公差尺寸均按 h6 制作，与之相配的联轴器、皮带轮、链轮等传动件内孔须按合适的公差尺寸配制，避免装配过紧损坏轴承，装配过松影响正常动力传递。

6.1.4 链轮、齿轮等传动件装上轴伸时，应尽量靠近轴承，以减少轴伸弯曲应力。

6.1.5 WPD 型减速机装配电机时，应在蜗杆头部内孔孔壁及键槽处涂抹黄油，避免装配过紧，防止轴孔日久生锈。

6.1.6 订购使用各类 WPD 减速机时，若电机重量偏大，应设支撑装置。

6.2 使用注意事项

6.2.1 使用前应注意检查减速机型式结构、中心距规格、传动比、输入轴连接方式、输出轴结构、输入轴输出轴轴指向和回转方向等是否符合使用要求。

6.2.2 按照样本上“油品润滑”中所规定的要求，注入合适的品种牌号润滑油。加油后，旋紧顶部的通气器，拔掉通气器上之小锥塞，减速机方可开始运转，必须选用合适牌号的润滑油，必须控制适宜的加油量，必须按规定要求及时换油，尤其要重视首次使用 100 小时后的更换新油。

6.2.3 使用过程中发生不正常情况时，应及时停机检查，可参照“故障分析”表处理。(减速机的油温最高允许达到 95 ℃，在此温度界限下，只要油温不再上升，可以放心使用）。

6. Installation & Usage

6.1 Notices of installation

6.1.1 The base-plate must be plane and stoutness, and the base-bolts must be screwed down and shockproof.

6.1.2 The connecting shafts of prime mover, reducer and operation device must be coaxial after installation.

6.1.3 The diameter tolerance zone of input and output shaft is h6, the holes of fittings (such as couplings, belt-pulley, sprocket wheel and so on)must properly mate the shaft, which prevents bearing from breakage because of over-tight mate or avoid effecting normal power transmission because of over-loose mate.

6.1.4 Drivers such as sprocket wheel and gear must be fitted close to bearings in order to reduce bending stress of hanging shaft.

6.1.5 While assembling motor of WPD reducer, it is necessary that proper amount of butter applies to the worm shaft input hole and keyway, avoiding assembling too tightly and rusting after using for a long time.

6.1.6 When Ordering and using all kinds of WPD type, if the motor weight is bigger than the common, Supporting set is required.

6.2 Notices of usage

6.2.1 Before using, please check carefully whether the reducer model, distance, ratio, input connecting method, output shaft structure,input and output shaft direction and revolving direction accord with requirement.

6.2.2 According to the requirement of " lubricant " in the product manual, please fill proper category and brand lub-ricant. And then screw on the vent-plug, uncork the small cone-plug of vent-plug. Only After doing these, reducer is ready for starting up running. The proper brand and adequate lubricant oil is required;replacing oil in time conforming to the request of product manual is also necessary, especially after using first 100 hours, it is required refilling new oil.

6.2.3 When abnormal circumstances occur, please stop and check reducer per "Malfunctions Analysis"(allowable highest oil temperature is 95℃, under this temperature limit,if oil temperature no more goes up,please let reducer continue running).

7. 油品润滑
7. Lubricant

蜗杆减速机使用前应注入 N220~N320 (环境温度 -30℃~40℃)或N320~N460(环境温度25℃~65℃)润滑油至油标中心点之上，并取掉通气器上之小锥塞。首次使用100小时后，洗净内部更换新油，以后每2500小时换油一次。

Before operation,input N220~N320(Ambient temperature -30℃~40℃)、N320~N460(Ambient temperature 25℃~65℃) lubrication oil up to the center line of the oil gauge. In the meanwhile, remove the small screw of the air-vent. After working for 100 hours in the first time, clear the inside and add new lubrication oil in it , then renew the lubricant oil per 2500 hours.

减速机在使用时，可按下表选用润滑油，加油量参照润滑油注油量表。
Lubricants for a reducer are optional in foreign as the below table. Adding oil according to capacity of lubrication oil.

Worm shaft speed (r/min)		Lubricant	Operating position Worm shaft,upper Worm shaft vertical	Operating position Worm shaft,lower Output shaft vertical
over	up to			
1000	3000	Synthetic oils	PG460	PG220
	1000			PG460
2000	3000	Mineral oils	ISO VG460	ISO VG220
750	2000			ISO VG320
250	750			ISO VG460
	250		ISO VG680	ISO VG680

周围温度 Ambient Temp	负荷 Load	ISO VG	GB3141-82	Shell	Mobil	AGMA	中国石化
-30℃ ~ -15℃	普通 Commonly	VG-100	N100	Shell Tivela S100	Gear 627 × P	5	CKE/P100
	重 Weight	VG-150	N150	Shell Tivela S150	Gear 629 × P	7	CKE/P150
-15℃ ~5℃	普通 Commonly	VG-150	N150	Shell Tivela S150	Gear 629 × P	7	CKE/P150
	重 Weight	VG-220	N220	Shell Tivela S220	Gear 630 × P	7EP	CKE/P220
5℃ ~ 25℃	普通 Commonly	VG-220	N220	Shell Tivela S320	Gear 630 × P	7EP	CKE/P220
	重 Weight	VG-320	N320	Shell Tivela S320	Gear 632 × P	6	CKE/P320
25℃ ~ 40℃	普通 Commonly	VG-320	N320	Shell Tivela S320	Gear 632 × P	6	CKE/P320
	重 Weight	VG-460	N460	Shell Tivela S460	Gear 634 × P	8	CKE/P460
40℃ ~ 65℃	普通 Commonly	VG-460	N460	Shell Tivela S460	Gear 634 × P	8	CKE/P460
	重 Weight	VG-680	N680	Shell Tivela S680	Gear 636 × P	8EP	CKE/P680

After the first 100 hours of operation:
Drain unit and flush with light oil. Refill.

Every 2500 hours of operation:
Drain unit and flush with light oil. Refill.

8. 故障分析

故障情况	故障原因	解决办法
过 热	原动机、减速机、工作机连接不当	调整至适当位置，使三者相联轴线同轴
	超负荷运转	适当调整负荷
	油封过度磨擦	在油封唇口处滴润滑油
	润滑油过少或过多	按油标指示点调整油量
	润滑油杂质多或润滑性差	更换合适新油
振 动	原动机、减速机、工作机固定不良	查出固定不良部位，正确固紧
	蜗轮副齿部磨耗或损伤	更换蜗轮副 (需要时本公司配合)
	轴承磨损	更换轴承
	螺栓松脱	固紧螺栓
杂 音	轴承损伤或间隙过大	更换轴承
	蜗轮副啮合不良	修整齿面或更换蜗轮副 (请与本公司联系)
	润滑油不足	按油标指示点补加润滑油
	机体内有异物	倒净润滑油带出异物，重加清洁润滑油
漏 油	油封唇口磨损	更换油封
	油封档轴颈磨损	更换输出轴或输入轴
	油量过多	按油标指示点调整油量
	放油螺塞未旋紧	螺纹处加密封胶、旋紧螺塞
	油标破损	更换油标
蜗轮副齿面磨损过快	超负荷运转	调整至适当负荷
	润滑油不符合要求	更换合适的润滑油
	润滑油不足	按油标指示点加足润滑油
	未按规定适时换油，润滑油劣化	按规定要求适时换油
	运转温度过高	1. 按“过热”故障处理 2. 采取合适措施，降低环境温度

注：如果发生其他故障无法解决时，请随时与我们联系，以便提供咨询服务。

8. Malfunctions Analysis

Fault Description	Reasons	Solutions
Overheating	Improper connection among prime mover, reducer and the operation device	Adjust to proper position
	Overloading	Adjust to proper load
	Over friction of oil seals	Drop lubricant at oil seal
	Lubricant oil overmuch or shortage	Adjust to proper oil quantity as indication
	Much impurity in oil or inferior oil	Refill proper oil
Vibration	Prime mover, reducer and the operation device mount badly	Find out the bad place,tighten it
	Tooth surface of worm gear sets worn-out or damaged	Replace worm gear sets(we will cooperate with you when necessary)
	Bearing worn-out	Replace Bearing
	Bolt loose	Tighten Screw
Noise	Bearing damaged or too large clearance	Replace Bearing
	Worm gear sets mesh badly	Mend tooth surface or replace worm gear sets (please contact to us)
	Lubricant oil shortage	Fill in adequate oil as indication
	Foreign object in box	Discharge all the oil in order to put out foreign object, and refill clean oil
Oil leakage	Oil seal lip worn-out	Replace oil seal
	Shaft of oil seal area worn-out	Replace input or output shaft
	Too much oil	Discharge adequate oil as indication
	Oil screw plug loose	Tighten oil screw plug
	Oil gauge damaged	Replace oil gauge
Tooth surface of worm gear sets abrade extra-quickly	Overload	Adjust to proper loading
	Lubricant oil not according with requirement	Replace proper lubricant oil
	Lubricant oil shortage	Fill adequate oil as indication
	Not replacing lubricant oil in time according to requirement, oil deteriorates	Replacing oil in time according to requirement
	Overheating while running	1. Deal with it as "Overheating" 2. Adopting proper measures to make environment temperature fall

Annotate:If other faults not listed above occur,Please contact with us at any moment,Our company will supply thorough consultation and service.